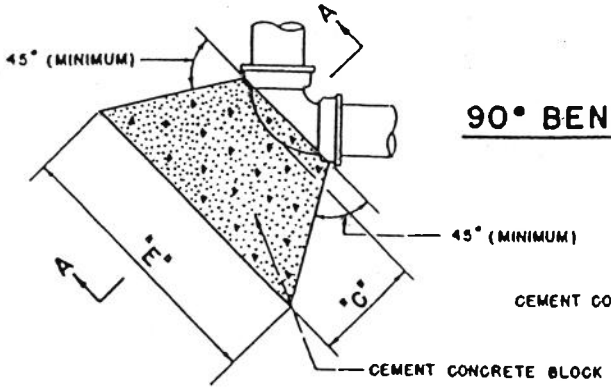

90° BEND

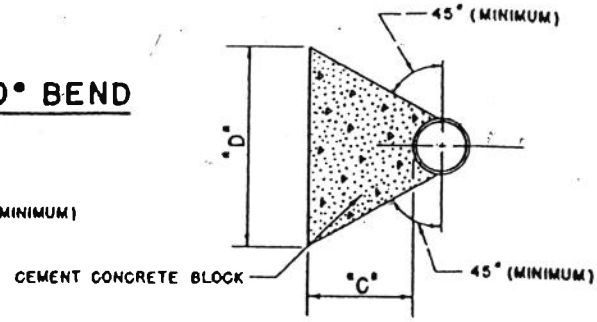

SECTION A-A

SIZE PIPE	REQUIRED BEARING AREA (SQ. FT.)	MINIMUM DIMENSIONS			BEARING AREA "E" x "D" (SQ. FT.)
		"C"	"D"	"E"	
4"	2.7	0'-6"	1'-3"	2'-3"	2.8
6"	6.0	1'-0"	2'-0"	3'-0"	6.0
8"	10.7	1'-6"	2'-9"	4'-0"	11.0
10"	16.7	2'-0"	3'-6"	5'-0"	17.5
12"	24.0	2'-3"	4'-3"	5'-9"	24.4
14"	32.6	2'-9"	5'-3"	6'-3"	32.8
16"	42.7	3'-3"	5'-8"	7'-6"	43.1

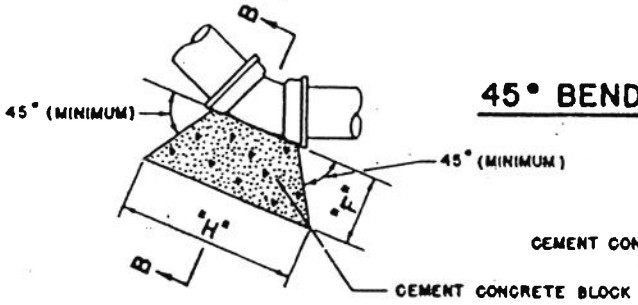

45° BEND

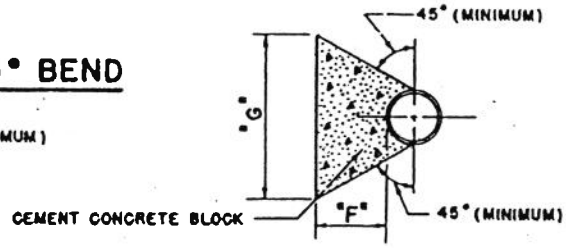

SECTION B-B

SIZE PIPE	REQUIRED BEARING AREA (SQ. FT.)	MINIMUM DIMENSIONS			BEARING AREA "G" x "H" (SQ. FT.)
		"F"	"G"	"H"	
4"	1.4	0'-6"	1'-3"	1'-6"	1.9
6"	3.3	0'-9"	1'-9"	2'-3"	3.9
8"	5.8	1'-0"	2'-3"	2'-9"	6.2
10"	9.0	1'-3"	3'-0"	3'-3"	9.8
12"	13.0	1'-6"	3'-6"	3'-9"	13.1
14"	17.7	1'-9"	4'-0"	4'-6"	18.0
16"	23.1	2'-0"	4'-6"	5'-3"	23.6

NOTES:

1. DESIGN ASSUMPTIONS: WATER PRESSURE = 300 POUNDS PER SQUARE INCH. ALLOWABLE SOIL PRESSURE = 2000 POUNDS PER SQUARE FOOT. CONSIDER STATIC PRESSURE ONLY.
2. RECOMMENDED DIMENSIONS OF BLOCKS ARE FOR DESIGN ASSUMPTIONS GIVEN. DIMENSIONS MAY BE CHANGED TO MEET OTHER CONDITIONS.
3. BEARING AREA OF BLOCK IN LINE OF RESULTANT THRUST SHALL BE AGAINST UNDISTURBED GROUND.
4. CONCRETE SHALL BE CLASS "B". MIX: 1 : 2½ : 3¼.

STANDARD WATER MAIN THRUST BLOCKS

CITY OF VERNON, CALIFORNIA

A.W. PHILLIPS, CITY ENGINEER

JANUARY, 1956

STANDARD PLAN
WV1374

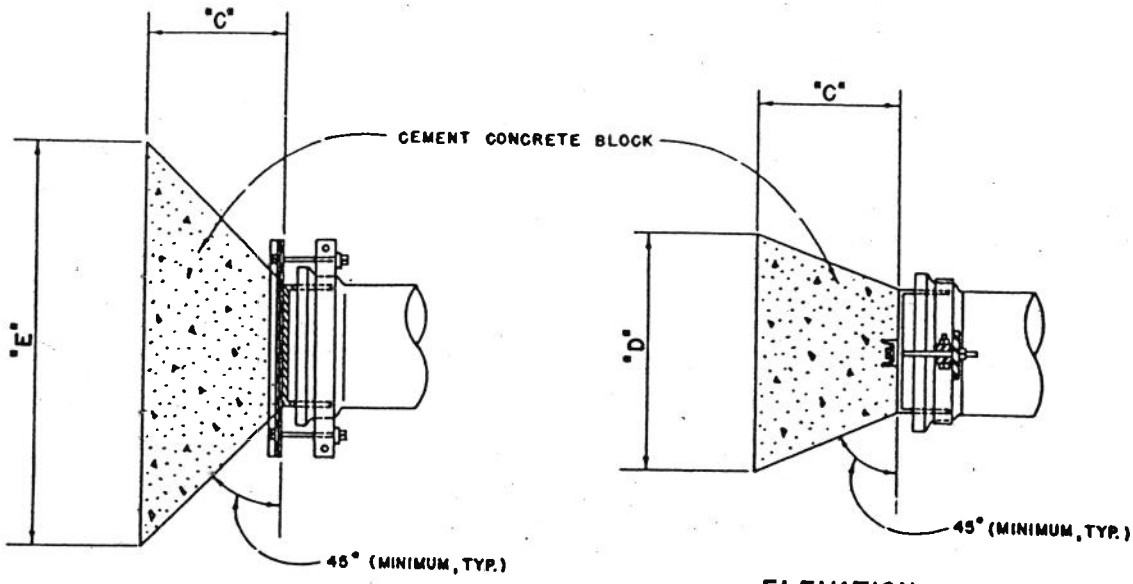

PLAN

ELEVATION

PIPE SIZE	REQUIRED BEARING AREA (SQ. FT.)	MINIMUM DIMENSIONS			BEARING AREA "E" x "D" (SQ. FT.)
		"C"	"D"	"E"	
4"	1.9	1'-0"	1'-0"	2'-0"	2.0
6"	4.2	1'-6"	1'-6"	3'-3"	4.9
8"	7.5	1'-9"	2'-0"	4'-0"	8.0
10"	11.8	2'-3"	2'-6"	5'-0"	12.5
12"	17.0	2'-6"	3'-0"	5'-9"	17.3
14"	23.1	2'-9"	3'-9"	6'-6"	24.4
16"	30.2	3'-0"	4'-3"	7'-3"	30.8

NOTES:

1. DESIGN ASSUMPTIONS: WATER PRESSURE = 300 LBS. PER SQUARE INCH. ALLOWABLE SOIL PRESSURE = 2000 LBS. PER SQUARE FOOT. CONSIDER STATIC PRESSURE ONLY.
2. RECOMMENDED DIMENSIONS OF BLOCKS ARE FOR DESIGN ASSUMPTIONS GIVEN. DIMENSIONS MAY BE CHANGED TO MEET OTHER CONDITIONS.
3. BEARING AREAS AND DIMENSIONS SHOWN HEREON ARE APPLICABLE BEHIND TEES AND FIRE HYDRANTS.
4. BEARING AREAS OF BLOCK IN LINE OF THRUST SHALL BE AGAINST UNDISTURBED GROUND.
5. CONCRETE SHALL BE CLASS "B".

STANDARD BLOCKING AT TEES & END OF LINE

CITY OF VERNON, CALIFORNIA

ENGINEERING DEPARTMENT

MAY , 1958

STANDARD PLAN
WV1376