UNIT 5: LIGHT SEARCH AND RESCUE OPERATIONS

In this unit you will learn about:

- **Search and Rescue Sizeup:** How to size up the situation in which the search and rescue teams will operate.
- **Conducting Interior and Exterior Search Operations:** How to search systematically for disaster victims.
- **Conducting Rescue Operations:** Safe techniques for lifting, leveraging, cribbing, and victim removal.

[This page intentionally left blank]

INTRODUCTION AND UNIT OVERVIEW

UNIT OVERVIEW

Search and rescue consists of three separate operations:

- Sizeup involves assessing the situation and determining a safe action plan (using the 9-step sizeup model).
- Search involves locating victims and documenting their location.
- Rescue involves the procedures and methods required to extricate the victims.

Previous disasters have shown that the first response to trapped victims immediately after almost every disaster is by spontaneous, untrained, and well-intentioned persons who rush to the site of a collapse in an attempt to free the victims.

More often than not, these spontaneous rescue efforts result in serious injuries and compounded problems.

Rescue efforts should be planned and practiced in advance. People, including rescuers, have died when the rescuers weren't prepared and trained.

DECIDING TO ATTEMPT RESCUE

The decision to attempt a rescue should be based on three factors:

- The risks involved to the rescuer
- The overall goal of doing the greatest good for the greatest number of people
- Resources and manpower available

INTRODUCTION AND UNIT OVERVIEW (CONTINUED)

GOALS OF SEARCH AND RESCUE

The goals of search and rescue operations are to:

- Rescue the greatest number of people in the shortest amount of time
- Get the walking wounded and ambulatory victims out first
- Rescue lightly trapped victims next
- Keep the rescuer safe

EFFECTIVE SEARCH AND RESCUE

Effective search and rescue operations hinge on:

- Effective sizeup
- Rescuer safety
- Victim safety

This unit focuses on the components of an effective search and rescue operation — sizeup, search, and rescue — and the methods and techniques that rescuers can use to locate and safely remove victims.

UNIT OBJECTIVES

At the end of this unit, you should be able to:

- Identify sizeup requirements for potential search and rescue situations.
- Describe the most common techniques for searching, both interior and exterior.
- Use safe techniques for debris removal and victim extrication.
- Describe ways to protect rescuers during search and rescue operations.

INTRODUCTION AND UNIT OVERVIEW (CONTINUED)

UNIT TOPICS

This unit will provide you with the knowledge and skills that you will need:

- Safety During Search and Rescue Operations
- Conducting Interior and Exterior Searches
- Conducting Rescue Operations

SAFETY DURING SEARCH AND RESCUE OPERATIONS

CERT Search and Rescue Sizeup

Like every other CERT operation, search and rescue requires sizeup at the beginning of the operation and continually as long as the operation continues.

Sizeup Steps:

1. Gather facts
2. Assess damage
3. Consider probabilities
4. Assess your situation
5. Establish priorities
6. Make decisions
7. Develop a plan of action
8. Take action
9. Evaluate progress

CERT Search and Rescue Sizeup Checklist		
Step 1: Gather Facts		
Time		
▪ Does the time of day or week affect search and rescue efforts? How?	Yes ☐	No ☐
Type of Construction and Terrain		
▪ What type(s) of structure(s) is (are) involved? ▪ What type(s) of construction is (are) involved? ▪ What type(s) of terrain is (are) involved?		
Occupancy		
▪ Are the structures occupied? If yes, how many people are likely to be affected?	Yes ☐	No ☐
▪ Are there special considerations (e.g., children, elderly)? If yes, what are the special considerations?	Yes ☐	No ☐
Weather		
▪ Will weather conditions affect your safety? If yes, how will your safety be affected?	Yes ☐	No ☐
▪ Will weather conditions affect the search and rescue situation? If yes, how will the search and rescue situation be affected?	Yes ☐	No ☐

Hazards		
▪ Are hazardous materials involved? If yes, at what location?	Yes ☐	No ☐
▪ Are any other types of hazards involved? If yes, what other hazards?	Yes ☐	No ☐
Step 2: Assess and Communicate the Damage		
▪ For structural searches, take a lap around the building. Is the damage beyond the CERT's capability? If yes, what special requirements or qualifications are required?	Yes ☐	No ☐
▪ Have the facts and the initial damage assessment been communicated to the appropriate person(s)?	Yes ☐	No ☐
Step 3: Consider Probabilities		
▪ Is the situation stable?	Yes ☐	No ☐
▪ Is there great risk or potential for more disaster activity that will impact personal safety? If yes, what are the known risks?	Yes ☐	No ☐
▪ What else could go wrong?		
Step 4: Assess Your Own Situation		
▪ What resources are available with which you can attempt the search and rescue?		
▪ What equipment is available?		

Step 5: Establish Priorities		
▪ Can a search and rescue be *safely* attempted by CERT members? If no, do *not* attempt a search and rescue.	Yes ☐	No ☐
▪ Are there other, more pressing needs at the moment? If yes, list.	Yes ☐	No ☐
Step 6: Make Decisions		
▪ Where will deployment of available resources do the most good while maintaining an adequate margin of safety?		
Step 7: Develop Plan of Action		
• Determine how personnel and other resources should be deployed.		
Step 8: Take Action		
▪ Put the plan into effect.		
Step 9: Evaluate Progress		
▪ Continually size up the situation to identify changes in the: • Scope of the problem • Safety risks • Resource availability		

SAFETY DURING SEARCH AND RESCUE OPERATIONS (CONTINUED)

STEP 1: GATHER FACTS

The facts of the situation must guide your search and rescue efforts.

When gathering facts, CERT members need to consider:

- The time of the event and day of the week. At night, more people will be in their homes, so the greatest need for search and rescue will be in residential settings. Conversely, during the day, people will be at work, so the need will be in commercial buildings. Search and rescue operations may also be affected by where people are located in their homes and the amount of daylight available.

- Construction type and terrain. Some types of construction are more susceptible to damage than others. The type of terrain will affect how the search is conducted.

- Occupancy. The purpose for which the structure was designed may indicate the likely number of victims and their location.

- Weather. Severe weather will have an effect on victims and rescuers alike and will certainly hamper rescue efforts. Forecasts of severe weather should be considered as a limiting factor on the time period during which search and rescue can occur.

- Hazards. Knowledge of other potential hazards in the general and immediate areas is important to search and rescue efforts. For example, if a gas leak is suspected, taking the time to locate and shut off the gas can have a big impact in terms of loss of life.

SAFETY DURING SEARCH AND RESCUE OPERATION (CONTINUED)

EXERCISE: GATHERING FACTS

Purpose: This exercise will give you the opportunity to consider some of the facts that CERT search and rescue teams will need to gather during sizeup.

Instructions:

1. Refer to the *Scenario* handout.
2. Brainstorm the following questions:
   - What does this scenario tell you about the probable density for the affected area?
   - What does this scenario tell you about the facts that must be gathered?
   - What impact could these facts have on search and rescue operations?
   - What kinds of search and rescue operations are probable?
   - What, if any, are the constraints that search and rescue personnel may face in this scenario?
   - Can these constraints be overcome within the established CERT mission? If so, how?

SCENARIO

At 2:30 p.m. on Tuesday, August 9, a squall line passed through your town. Because of the difference in barometric pressure on either side of the front, the squall line was preceded by a "gust front" with straight-line winds of more than 70 miles per hour. The gust front was followed by continued strong winds and extremely heavy rain. Electricity was knocked out throughout the town.

You activate in accordance with your CERT program's standard operating procedures (SOPs). On the way to the staging area at the local high school, you notice considerable damage, including felled trees and utility lines. Many streets are impassable, making you take a roundabout route to the high school. As you make your way to the staging area, you see that the roof has blown off of a large portion of a local strip shopping center and that the exterior wall on the west end of the structure has collapsed.

After reaching the staging area, you check in with the Logistics Team Leader, who assigns you to Search and Rescue Team 2. Although CERT members cannot venture into the section of the shopping center that has collapsed, Search and Rescue Team 2 will be searching near the collapsed area to see if there are victims in that area.

SAFETY DURING SEARCH AND RESCUE OPERATIONS (CONTINUED)

STEP 2: ASSESS AND COMMUNICATE DAMAGE

There are general guidelines for assessing damage in interior searches and exterior searches. When in doubt about the condition of a building, CERT members should always use the more cautious assessment. If unsure about whether a building is moderately or heavily damaged, CERTs should assume heavy damage. The CERT mission changes depending on the amount of structural damage.

CERT MISSION AND TYPES OF DAMAGES

The CERT mission for interior searches changes if:

- Damage is light (superficial or cosmetic damage, superficial cracks or breaks in the wall surface, minor damage to the interior contents)

  The CERT mission is to locate; triage; treat airway, major bleeding, and shock; continue sizeup; and document.

- Damage is moderate (visible signs of damage, decorative work damaged or fallen, many visible cracks in the wall surface, major damage to interior content, building is on its foundation)

  The CERT mission is to locate; treat airway, major bleeding, and shock; evacuate; warn others; continue sizeup while minimizing the number of rescuers and time spent inside the structure.

- Damage is heavy (partial or total collapse, tilting, obvious structural instability, building off its foundation, heavy smoke or fire, hazardous materials inside, gas leaks, rising or moving water)

  The CERT mission is to secure the building perimeter and warn others of the danger in entering the building.

CERT members are not to enter a building with heavy damage under any circumstances.

SAFETY DURING SEARCH AND RESCUE OPERATIONS (CONTINUED)

LIGHT DAMAGE

Light damage includes:

- Superficial damage
- Broken windows
- Superficial cracks or breaks in the wall surface, for example, fallen or cracked plaster
- Minor damage to the interior contents

MODERATE DAMAGE

Moderate damage includes:

- Visible signs of damage
- Decorative work damaged or fallen
- Many visible cracks or breaks in the wall surface
- Major damage to interior contents
- Building still on foundation

HEAVY DAMAGE

Heavy damage includes:

- Partial or total collapse
- Tilting
- Obvious structural instability
- Building off foundation

SAFETY DURING SEARCH AND RESCUE OPERATIONS (CONTINUED)

ASSESSING DAMAGE

Assessing the damage of a building or structure will require an examination from all sides. Be sure to do an initial "lap around."

In assessing damage, CERT personnel must consider probable levels of damage based on the type and age of construction.

In addition to a visual assessment, rescuers should also “listen” to damaged structures. If a building is creaking or “groaning,” it is unstable and should not be entered.

COMMUNICATING DAMAGE

You can describe different locations within and around the structure by using the ABCD standard, with A corresponding to the front of the building and B, C, and D representing the sides of the building moving clockwise from A.

Using this system, the area inside of a structure can be further broken down by quadrants to facilitate communication. For instance, a hazard or victim located closest to the A and B sides of the structure is in the A/B quadrant.

You must communicate your findings to the CERT command post or responding agencies.

Probable Severity and Type of Earthquake Damage Based on Construction Type

Construction Type	Description	Probable Damage Areas	Severity
Single-Family Dwelling	▪ Wood frame	▪ Masonry chimney ▪ Utilities	Light
	▪ Pre-1933	▪ Foundation movement ▪ Utilities ▪ Porches	Moderate
	▪ Hillside	▪ Unique hazards ▪ Ground failure	Heavy
Multiple-Family Dwelling	▪ Up-and-down and/or side-by-side living units	▪ Soft first floor ▪ Utilities	Moderate
Unreinforced Brick	▪ Pre-1933 construction ▪ Lime or sand mortar ▪ "King Row" or "Soldier Row" (bricks turned on end every 5-7 rows) ▪ Reinforcing plates ▪ Arched windows and doors ▪ Recessed windows and doors	▪ Walls collapse, then roof	Heavy
Tilt-Up	▪ Large warehouses and plants ▪ Concrete slabs lifted into place ▪ Walls inset approximately 6-8 inches ▪ Lightweight roof construction	▪ Roof collapses, then walls	Heavy
High-Rise	▪ Steel reinforced	▪ Broken glass ▪ Content movement ▪ Exterior trim and fascia	Light

SAFETY DURING SEARCH AND RESCUE OPERATIONS (CONTINUED)

STEP 3: CONSIDER PROBABILITIES

Because you will be working in such close proximity to the dangerous situation, considering what will probably happen and what could happen are of critical importance. Be sure to identify potentially life-threatening hazards and ask:

- How stable is the situation? Even within a structure that appears from the outside to have only minimal or moderate damage, nonstructural damage or instability inside the structure can pose real danger to the rescue team. CERT members should think about what they already know about the structure that's been damaged. Are lawn chemicals, paints, or other potentially hazardous materials stored within the structure? How are they stored? Where are they? It won't take CERT members much time to answer these types of questions, but the answers could make a huge difference in how they approach the search.

- What else could go wrong? Based on the information gathered during Steps 1 and 2 of the sizeup, CERT members should take a few moments to play "What if?" to try to identify additional risks that they may face. What if the electricity fails during the search? What if a wall that appears stable shifts and collapses? Applying "Murphy's Law" to the situation could save CERT members' lives.

- What does it all mean for the search and rescue? Based on the probabilities, CERTs should think about what they can do to reduce the risks associated with the probabilities that they have identified. Is a spotter necessary to look for movement that could indicate a possible collapse and warn the rescue team? Is some remedial action required to stabilize nonstructural hazards before beginning the search? CERT search and rescue teams must remember that their own safety is the first priority.

SAFETY DURING SEARCH AND RESCUE OPERATIONS (CONTINUED)

STEP 4: ASSESS YOUR SITUATION

Remember that sizeup is a building process, with each step building upon the previous steps until the decision is made to begin the search and rescue operation (or that the situation is unsafe). You need to draw on everything you've learned from Steps 1 through 3 to assess your situation to determine:

- Whether the situation is safe enough to continue
- The risks that rescuers will face if they continue
- What resources will be needed to conduct the operation safely and what resources are available

Assessing resources, including personnel, tools, and equipment, is extremely important to search and rescue operations.

Search and Rescue Resource Planning Questions	
Resource	**Planning Questions**
Personnel	▪ How many trained CERT members are available for this operation? ▪ Who lives and/or works in the area? ▪ During which hours are these people most likely to be available? ▪ What skills or hobbies do they have that might be useful in search and rescue operations? ▪ What might be the most effective means of mobilizing their efforts?
Equipment	▪ What equipment is available locally that might be useful for search and rescue? ▪ Where is it located? ▪ How can it be accessed? ▪ On which structures (or types of structures) might it be most effective?
Tools	▪ What tools are available that might be useful for lifting, moving, or cutting disaster debris?

SAFETY DURING SEARCH AND RESCUE OPERATIONS (CONTINUED)

RESCUE RESOURCES

Search and rescue resources include:

- Personnel
  - How many CERT members are available for this operation?
  - In addition, who lives and/or works in the area?
  - When are they likely to be available?
  - Do they have skills that might be useful in search and rescue operations?
  - How can their efforts be mobilized?
- Equipment
  - What equipment is available that might be useful for search and rescue?
  - Where is it located?
  - How can it be accessed?
  - On which structures (or types of structures) might it be most effective?
- Tools
  - What tools are available that might be useful for lifting, moving, or cutting debris?

SAFETY DURING SEARCH AND RESCUE OPERATIONS (CONTINUED)

STEP 5: ESTABLISH PRIORITIES

After evaluating the situation and keeping in mind that the safety of the CERT member is always the top priority, the next step is to determine:

- What should be done?
- In what order?

Remember your goal: to rescue the greatest number in the shortest amount of time.

The safety of CERT members is always the first priority and will dictate some of the other priorities. For example, removing or mitigating known hazards must be completed before teams begin to search. Think through the situation logically to determine how you should approach the operation.

STEP 6: MAKE DECISIONS

At this point in the sizeup you will make decisions about where to deploy your resources to do the most good while maintaining an adequate margin of safety. Many of your decisions will be based on the priorities established during Step 5. Those priorities are based on:

- The safety of CERT members
- Life safety for victims and others
- Protection of the environment
- Protection of property

SAFETY DURING SEARCH AND RESCUE OPERATIONS (CONTINUED)

STEP 7: DEVELOP PLAN OF ACTION

Step 7 is where all of the information you have about the situation comes together. During Step 7, the CERT Incident Commander/Team Leader (IC/TL) will decide specifically how the team will conduct its operation, considering the highest priority tasks first.

An action plan does not need to be written, but when search and rescue operations are required, the situation is probably complex enough that a written plan of some type will be important.

A plan should:

- Help focus the operation on established priorities and decisions
- Provide for documentation to be given to responding agencies when they arrive on scene
- Provide for documentation that will become part of the record of the CERT's overall operation

Keep notes as you develop your action plan. Any changes made to the initial plan based on new information that comes in should also be documented.

STEP 8: TAKE ACTION

This step involves putting the plan developed in Step 7 into action.

STEP 9: EVALUATE PROGRESS

Step 9, Evaluate Progress, is the most critical step, not only in terms of evaluating whether the plan works, but also from a safety standpoint.

Remember that sizeup is ongoing and that information gained during Step 9 needs to be fed back into the decision-making process for possible revision of priorities and updated action planning.

Specific Safety Considerations

Regardless of the severity of structural damage, rescuer safety must be the primary concern.

The two most frequent causes of rescuer deaths are:

- Disorientation
- Secondary collapse

Follow these guidelines during all search and rescue operations:

- Use a buddy system. Successful search and rescue depends on teamwork.
- Be alert for hazards (e.g., power lines, natural gas leaks, hazardous materials, sharp objects, etc.). You should never attempt to search an area where water is rising.
- Use safety equipment. Wearing gloves and a helmet will protect a rescuer's hands and head. Also, the primary cause of rescuer problems after working in a structural collapse is breathing dust, so a dust mask is essential. However, a dust mask will not filter out all harmful materials. If the presence of chemical or biological agents is suspected, CERTs must evacuate to an upwind location and notify professional responders.
- Have backup teams available to allow rotating of teams, prevent fatigue, and ensure help if a team gets into trouble. Have teams drink fluids and eat to keep themselves fresh.

SAFETY DURING SEARCH AND RESCUE OPERATIONS (CONTINUED)

EXERCISE: SEARCH AND RESCUE SIZEUP

Purpose: This exercise is an interactive activity that will provide an opportunity to practice some of the thinking processes involved in planning and search and rescue sizeup.

The brainstorming required will help you to begin to assess your neighborhoods or workplaces in terms of building structures, hazardous materials, safety precautions that need to be taken, etc.

Instructions:

1. Assemble in groups of four or five.
2. Read the scenario given to you by the instructor.
3. Designate a recorder and, given the disaster and the specific building, answer the following questions:
   - What are the pertinent facts that must be gathered?
   - What kind of prediction can you make regarding damage, based on the incident and the building construction?
   - What probable search and rescue problems can you identify?
   - What specific safety considerations can you identify?
4. Select a spokesperson to present the group's responses to the class.

CONDUCTING INTERIOR AND EXTERIOR SEARCH OPERATIONS

When the decision is made to initiate search operations, CERT members will inspect the area assigned by the CERT Incident Commander/Team Leader (IC/TL).

The search operation involves two processes:

1. Employing search techniques based on the sizeup
2. Locating any victims

By using these processes, search operations will be more efficient, thorough, and safe. They will also facilitate later rescue operations. Although the processes are related, this section addresses them one at a time. Interior search operations are the most common and will be discussed first; exterior search operations will be discussed later in this unit.

LOCATING POTENTIAL VICTIMS IN A STRUCTURE

The first step in locating potential victims in a structure is to conduct a sizeup of the interior of the building to gather more precise information about damage and to develop priorities and plans.

The data gathered will provide more information about possible areas of entrapment — or voids.

STRUCTURAL VOIDS

There are several types of voids:

- Pancake void
- Lean-to void
- “V” void

If CERT members see collapsed floors or walls, they should leave the premises immediately.

CONDUCTING INTERIOR AND EXTERIOR SEARCH OPERATIONS (CONTINUED)

INDIVIDUAL VOIDS

Individual voids are spaces into which the victim may have crawled for protection. Examples of individual voids include bathtubs and the space underneath desks. Children may seek shelter in smaller places like cabinets.

After identifying the possible areas of entrapment, CERT members must:

- Determine the potential number of victims
- Identify the most probable areas of entrapment

Some information may be known through assessment, but CERT members may need to get some information by talking to bystanders or those who are familiar with the structure.

CERT members should ask questions when talking with these individuals, including:

- How many people live (or work) in the building?
- Where would they be at this time?
- What is the building layout?
- What have you seen or heard?
- Has anyone come out?
- What are the normal exit routes from the building?

Be aware that bystanders may be confused by the event. They may tend to exaggerate potential numbers or may not even remember the event accurately. Gather as much information as you can, though, because it will be useful for planning search priorities and implementing the search.

CONDUCTING INTERIOR AND EXTERIOR SEARCH OPERATIONS (CONTINUED)

SEARCH METHODOLOGY

An effective search methodology:

- Indicates rescuer location
- Locates victims as quickly and safely as possible
- Prevents duplication of effort

Search Markings

Experienced search and rescue personnel use the following system. The same system will be used by CERTs. This will save fellow CERT members and other responders time during the search and continual sizeup of the structure.

1. Upon entering a search area, you will make a mark next to the door to indicate that you are entering. Do not make the mark on the door or on the wall where the door swings. Make a single slash and write the agency or group ID at the "9 o'clock" position. Then write the date and "time in" at the "12 o'clock" position.

2. Upon exiting the search area, make another slash to form an "X" (the agency or group ID will be in the left quadrant). Enter the search "time out" In the top quadrant.

   - Right quadrant: Enter the areas of the structure searched and any specific information about hazards.

   - Lower quadrant: Enter information about the victims found in the search area. "L" represents living victims, while "D" represents dead victims. The search marking on the front of a structure or building should contain the total number of victims, whereas search markings inside the structure or building will include victim totals for specific search areas. Also indicate where victims have been taken.

CONDUCTING INTERIOR AND EXTERIOR SEARCH OPERATIONS (CONTINUED)

Search Methodology

1. Upon entering each space or room, call out to victims. Shout something like, "If anyone can hear my voice, come here." If any victims come to you, ask them for any information that they may have about the building or others who may be trapped, then give them further directions such as, "Stay here" or "Wait outside" (depending on the condition of the building).

   Remember that even those who are able to get to you may be in shock and confused. When giving directions to victims, CERT members should look directly at the victims, speak in short sentences, and keep their directions simple.

2. Use a systematic search pattern. Ensure that all areas of the building are covered. Examples of systematic search patterns to use include:
   - Bottom-up/top-down
   - Right wall/left wall

   Keep in mind that every interior space has six sides — including the floor and ceiling. Rescuers must check all six sides especially to locate hazards such as fixtures that may be hanging from the ceiling.

3. Stop frequently to listen. Listen for tapping, movement, or voices.

4. Triangulate. Triangulation can be used when a potential victim's location is obscured. If access permits, three rescuers, guided by victim sounds, form a triangle around the area and direct flashlights into the area. The light shining from different directions will eliminate shadows that could otherwise hide victims.

   Triangulation should not be used as an initial search method.

5. Report results. Keep complete records both of removed victims and of victims who remain trapped or are dead. Report this information to emergency services personnel when they reach the scene.

CONDUCTING INTERIOR AND EXTERIOR SEARCH OPERATIONS (CONTINUED)

Exterior Search

In addition to searching inside a structure, CERT members might also be required to search open areas outside of buildings.

Conducting an effective search in open areas requires that searchers work methodically and follow standard procedures established by those in charge of the search operation. This is true in all cases, and especially if the area to be searched is a crime scene where all potential evidence must be protected.

When searchers are needed, they assemble in a central staging area and sign in. Authorities will brief the searchers on what they will be looking for, what areas they are responsible for searching, the pattern of the search, and what they should do if they discover the missing person, evidence, or related information.

Exterior search patterns include grid, line, quadrant or zone, and spiral. A grid pattern is typically used in large open areas or small areas when a hands-and-knees search is conducted.

To conduct a grid search:

- The area to be searched is viewed as a grid, with searchers initially positioned at one side of the grid.
- The distance between the searchers should be set according to visibility and debris. In all cases, searchers must remain within line of sight and voice contact with searchers on either side of them.
- It is also critical that the area to be covered by each searcher overlaps that of the searchers on either side of them.
- The searchers proceed, maintaining as straight a line as possible across the entire search area. As each searcher moves across the area, they conduct a thorough search for victims within their designated row of the grid.
- In order to ensure full coverage, CERTs must record each area that has been searched.

A grid search might be particularly useful following a tornado or hurricane.

CONDUCTING RESCUE OPERATIONS

Rescues involve three primary functions:

- Moving objects and debris to free victims and to create a safe rescue environment
- Triaging victims by checking for the "three killers," airway obstruction, major bleeding, and shock
- Removing victims as safely and as quickly as possible

CREATING A SAFE ENVIRONMENT

There are three safety considerations for all rescue operations:

- To maintain rescuer safety
- To triage in lightly and moderately damaged buildings
- To evacuate victims as quickly as possible from moderately damaged buildings while minimizing additional injury

None of these can be achieved without creating as safe an environment as possible before attempting rescue. There are, therefore, certain precautions that rescuers must take to minimize risk.

CONDUCTING RESCUE OPERATIONS (CONTINUED)

PRECAUTIONS TO MINIMIZE RISK

There are certain precautions that rescuers must take to minimize risk and increase their chances of achieving their rescue goals.

- Know your limitations. Many volunteers have been injured or killed during rescue operations because they did not pay attention to their own physical and mental limitations. CERT rescuers should take the time to eat, drink fluids, rest, and relax so that they can return with a clear mind and improved energy.

- Follow safety procedures. CERT members should always use the proper safety equipment required for the situation and follow established procedures, including:

  - Work in pairs.
  - Triage and treat only in lightly damaged buildings.
  - In moderately damaged buildings, triage only and remove victims as quickly as possible.
  - Never enter an unstable structure.
  - Lift by bending the knees, keeping the back straight, and pushing up with the legs.
  - Carry the load close to the body.
  - Lift and carry no more than is reasonable.
  - Remove debris as needed to minimize risk to rescuers and to free entrapped victims.

Proper Body Position for Lifting

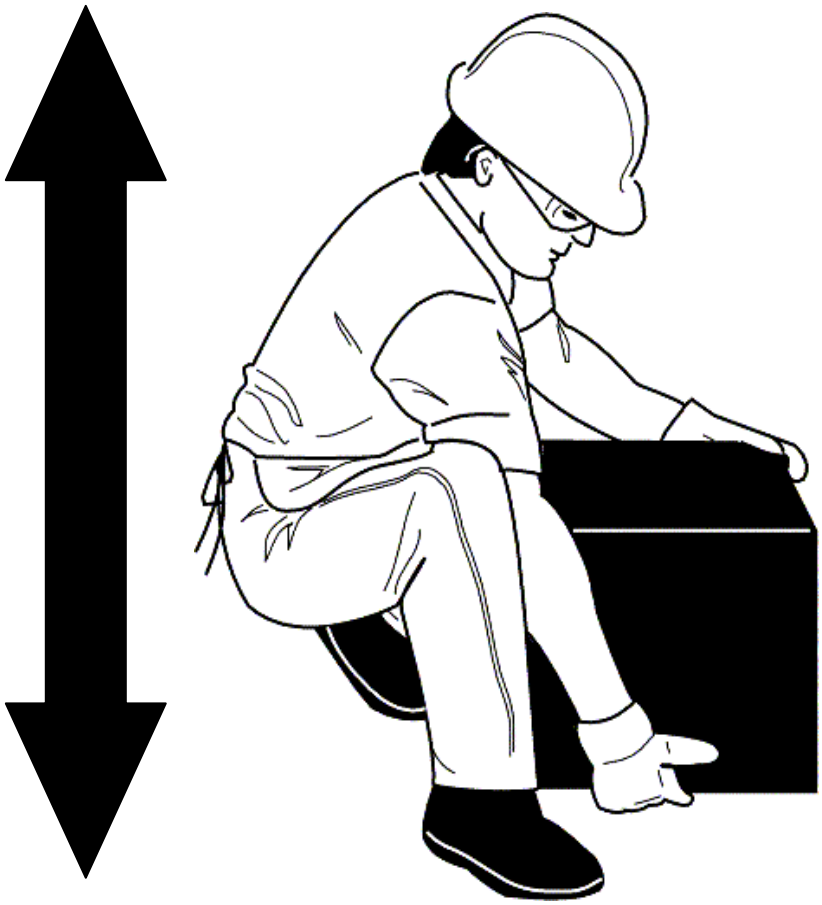

Proper body position for lifting showing the back straight and lifting with the knees

CONDUCTING RESCUE OPERATIONS (CONTINUED)

LEVERAGING AND CRIBBING

You may encounter situations in which debris needs to be moved to free victims. In these situations, CERT rescuers should consider leveraging and cribbing to move and stabilize the debris until the rescue is complete.

- Leveraging is accomplished by wedging a lever under the object that needs to be moved, with a stationary object underneath it to act as a fulcrum. When the lever is forced down over the fulcrum, the far end of the lever will lift the object.
- A crib is a wooden framework used for support or strengthening. Box cribbing means arranging pairs of wood pieces alternately to form a stable rectangle.

Leveraging and cribbing are used together by alternately lifting the object and placing cribbing materials underneath the lifted edge to stabilize it.

Safety is number one: "Lift an inch; crib an inch." Leveraging and cribbing should be gradual — both for stability and to make the job easier.

It may also be necessary to use leveraging and cribbing at more than one location (e.g., front and back) to ensure stability. Leveraging and cribbing at opposite ends should never be done at the same time because doing so will increase the instability of the debris. If leveraging is required at both ends, lift and crib at one end, then repeat the process at the other end.

Positioning the pry tool and the fulcrum correctly is critical for safe operations. The fulcrum and pry tool must be perpendicular (90 degrees) to the edge of the object being lifted. Also, attempting to leverage a heavy object using too sharp an angle is inefficient and can result in back injury.

Box cribbing is stable, but it requires pieces of cribbing material of relatively uniform size. When such material is not available, “unboxed” cribbing can also work effectively to support and stabilize the heavy object.

A variety of cribbing materials may be used for these procedures and you will probably need to improvise by using materials such as tires or structural debris. Whatever you use, don’t put form over function.

CONDUCTING RESCUE OPERATIONS (CONTINUED)

When you are able to achieve sufficient lift, you should remove the victim and reverse the leveraging and cribbing procedure to lower the object. You should never leave an unsafe condition, unless the structure or building is obviously compromised.

When you must remove debris to locate victims, you should set up a human chain and pass the debris from one person to the next. Be careful, however, to set up the chain in a position that will not interfere with rescue operations.

Wear your PPE to protect yourself at all times. Kneepads can be an important addition to your PPE during rescue operations.

Leveraging and Cribbing

1. Conduct a sizeup of the scene: Gather facts, identify hazards, and establish priorities.

2. Have one person in charge and formulate a plan of action, based upon the information you have received, to identify how and where to lift and crib and how the victim will be removed from underneath the debris.

3. Gather necessary materials for lifting/cribbing operations: Lever, fulcrum, cribbing blocks, spacers/wedges. During an actual emergency, you may have to use creative, substitute materials.

4. Use cribbing materials to stabilize the object prior to lifting.

5. Distribute cribbing materials as necessary to be readily accessible during the lifting operation.

6. Prepare to lift the object: Assemble the lever and fulcrum at the previously identified location.

7. Assign a person to monitor and be ready to remove the victim as soon as possible.

8. Initiate the lift, using the lever and fulcrum for mechanical advantage.

9. As the object is lifted, add cribbing as needed, one layer at a time.

10. When the object is adequately supported, remove the lever and fulcrum. The victim may then be removed.

11. Unless the structure is obviously compromised and you need to evacuate immediately, reinitiate the lift and begin removing cribbing materials, reversing the process by which the crib was built.

12. Progressively lower the object to the ground. Always return the heavy object to a stable position unless you have to evacuate immediately.

13. Before you leave, remember to collect the lifting/cribbing supplies to be available for additional operations.

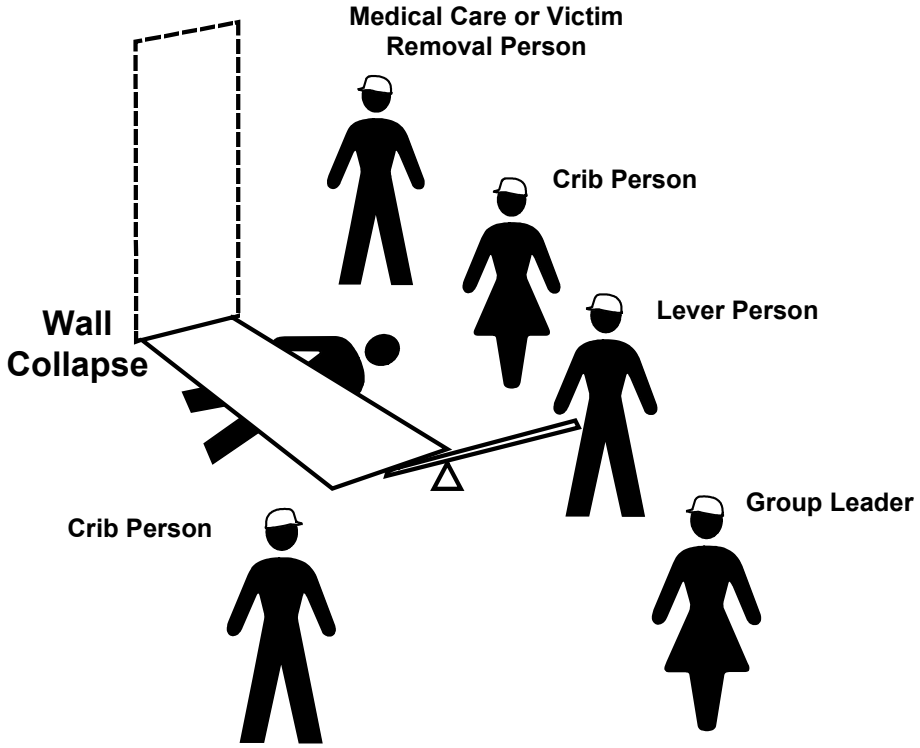

Team organization for leveraging/cribbing operation, showing the victim underneath a collapsed wall and the CERT members at the following locations:

- **Group Leader: In front of collapse, positioned so that he or she can view the entire operation while remaining out of the rescuers' way**
- **Lever Person: At the front edge of the collapsed wall and positioned so that he or she can position a fulcrum and lever under the wall**
- **Crib Persons: On either side of the collapsed wall and positioned to enable the placement of cribbing as the wall is raised with the lever**
- **Medical Care/Victim Removal Person: Next to the Crib Person who is closest to the victim's head**

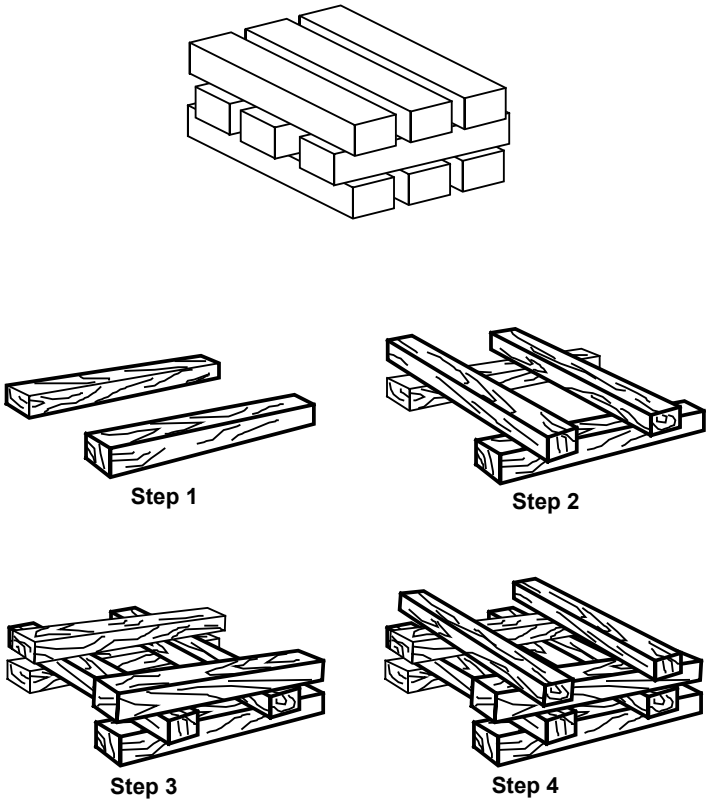

Four steps for building box cribbing:

Step 1: Position two pieces of wood parallel to each other on either side of the collapse.

Step 2: Place two pieces of wood perpendicularly across the base pieces.

Steps 3 and 4: Add additional layers of wood, with each perpendicular to the previous level.

CONDUCTING RESCUE OPERATIONS (CONTINUED)

REMOVING VICTIMS

There are two basic types of victim removal:

- Self-removal or assist
- Lifts and drags

It is usually best to allow an ambulatory victim to extricate him- or herself. Be aware that sometimes ambulatory victims are not as strong and uninjured as they think they are. When victims become free from entrapment, they may need assistance to exit the structure.

Extrication Method

The type of extrication method selected should depend on the:

- General stability of the immediate environment
- Number of rescuers available
- Strength and ability of the rescuers
- Condition of the victim

If safety and time permit, you should not use lifts and drags to remove victims when closed-head or spinal injury is suspected. In such cases, the spine must be stabilized using a backboard. Doors, tables, and similar materials can be used as improvised backboards. The backboard must be able to carry the person and proper lifting techniques must be used.

When moving victims, rescuers must use teamwork and communication and keep the victim's spine in a straight line. Remember, rescuer safety and the condition of the building will dictate the approach.

CONDUCTING RESCUE OPERATIONS (CONTINUED)

One-Person Arm Carry

If a rescuer is physically able and the victim is small, the rescuer may use the one-person arm carry to lift and carry the victim by:

- Reaching around the victim's back and under the knees
- Lifting the victim while keeping the rescuer's back straight and lifting with the legs

Consider the size of the victim and the distance he or she needs to be carried before using this carry.

Pack-Strap Carry

Another way for a single rescuer to lift a victim safely is by using the one-person pack-strap carry. Using this method, the rescuer should:

- Step 1: Stand with his or her back to the victim.
- Step 2: Place the victim's arms over the rescuer's shoulders and grab the hands in front of the rescuer's chest.
- Step 3: Hoist the victim by bending forward slightly, until the victim's feet just clear the floor.

Note: The pack-strap carry is most effective for quick removal of a victim over a short distance.

CONDUCTING RESCUE OPERATIONS (CONTINUED)

Two-Person Carry

Victim removal is easier when multiple rescuers are available. The victim's upper body will weigh more than his or her lower body; therefore, rescuers with greater body strength should be positioned at the victim's upper body.

A victim may be removed using a two-person carry:

- Rescuer 1: Squat at the victim's head and grasp the victim from behind around the midsection. Reach under the arms and grasp the victim's left wrist with rescuer's right hand, and vice versa. Crossing the wrists creates a more secure hold on the victim and also pulls the victim's arms and elbows closer to their body. This will be helpful if the victim is carried through any narrow passages.

- Rescuer 2: Squat between the victim's knees, facing either toward or away from the victim. Note that, if the rescuers will carry the victim over uneven areas such as stairs, the rescuers will need to face each other. Grasp the outside of the victim's legs at the knees. Both rescuers: Rise to a standing position simultaneously, keeping backs straight and lifting with the legs. Walk the victim to safety.

Chair Carry

Two rescuers can also remove a victim by seating him or her on a chair:

- Rescuer 1: Cross the victim's arms in his or her lap. Facing the back of the chair, grasp the back upright.

- Rescuer 2: Grasp the two front legs of the chair.

- Both rescuers: Tilt the chair back, lift simultaneously, and walk out.

It is best to use a sturdy, non-swivel chair for this lift.

Note that, if rescuers will need to carry the victim over uneven surfaces such as stairs, the rescuers must face each other.

CONDUCTING RESCUE OPERATIONS (CONTINUED)

Blanket Carry

You can use the blanket carry for victims who cannot be removed by other means. The blanket carry requires four to six rescuers to ensure stability for the victim and that one rescuer must be designated the lead person:

- Step 1: Position a blanket next to the victim, ensuring that the blanket will extend under the victim's head.
- Step 2: Tuck the blanket under the victim, and assist the victim in moving to the center of the blanket. If necessary, use the log rolling technique to position them on the blanket.
- Step 3: With three rescuers squatting on each side, roll up the edges of the blanket against the victim to grasp a "handle." The lead person checks the team for even weight distribution and correct lifting position.
- Step 4: The lead person calls out, "Ready to lift on the count of three: One, two, three, *lift.*"
- Step 5: The team lifts and stands in unison — keeping the victim level — and carries the victim feet first.

The team must also lower the victim together, using the following steps:

- Step 1: The lead person calls out, "Ready to lower on the count of three: One, two, three, *lower.*"
- Step 2: The team lowers the victim in unison, exercising caution to keep the victim level.

A variety of materials — such as blankets, carpets, and folded tables — can be used as improvised stretchers.

Log Rolling

Log rolling should be used to move victims with a suspected or confirmed cervical spine injury. If the victim is unconscious, assume he or she has a cervical spine injury. The rescuer at a victim's head should give commands as fellow rescuers roll the victim as a single unit onto the blanket, backboard, or other support.

Types of Lifts and Carries

One-Person Arm Carry

One-Person Arm Carry, with the rescuer holding the victim around the victim's back and under the knees.

One-Person Pack-Strap Carry

One-Person Pack-Strap Carry in which the rescuer places the victim's arms over his or her shoulders and grabs the victim's wrists over his or her chest, then hoists the victim by bending over slightly.

Two-Person Carry

Two-Person Carry in which Rescuer 1 squats at the victim's head and grasps the victim from behind at the midsection. Rescuer 1 should use his right hand to grab the victim's left wrist, and vice versa. Rescuer 2 squats between the victim's knees, grasping the outside of the knees. Both rescuers rise to a standing position."

Chair Carry

Chair Carry in which the victim is placed in a sturdy, non-swivel chair and tilted backward as rescuers lift the victim. This carry requires two rescuers. If possible, secure victim to the chair.

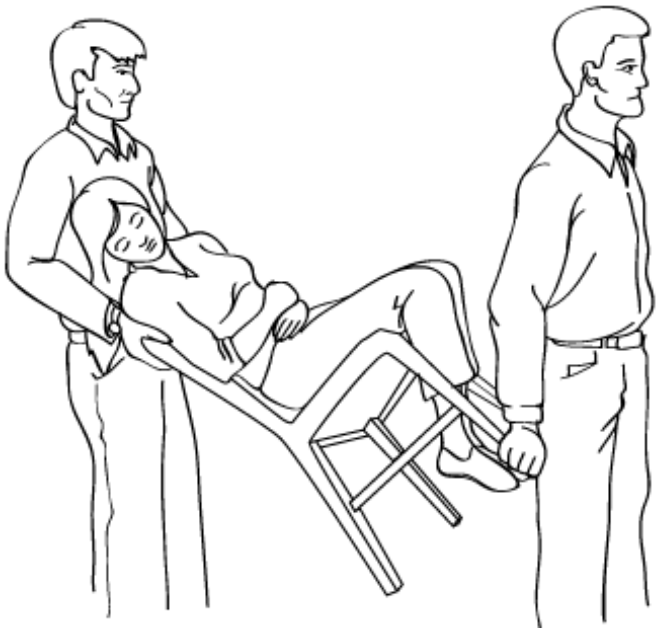

Note that if rescuers will need to carry victim over uneven surfaces, such as stairs, the rescuers must face each other.

CONDUCTING RESCUE OPERATIONS (CONTINUED)

Blanket Drag

When necessary, one rescuer can use the blanket drag by following these steps:

- Step 1: Wrap the victim in a blanket.
- Step 2: Squat down and grasp an edge of the blanket.
- Step 3: Drag the victim across the floor.

Correct Drag Techniques

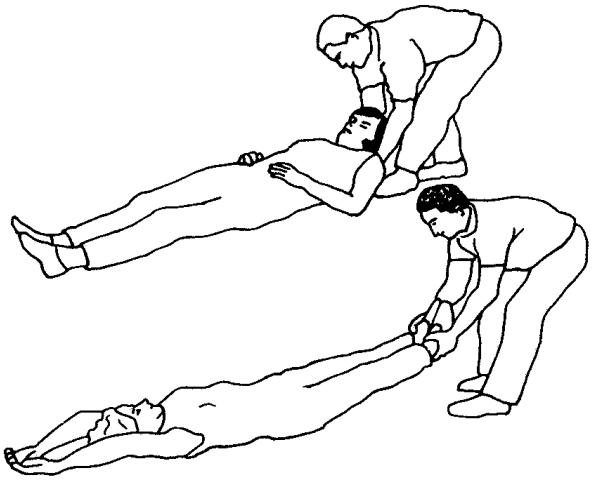

Correct Drag Technique

Correct drag technique, showing the rescuer grasping the victim by either the feet or shoulders and dragging him or her clear of the hazard

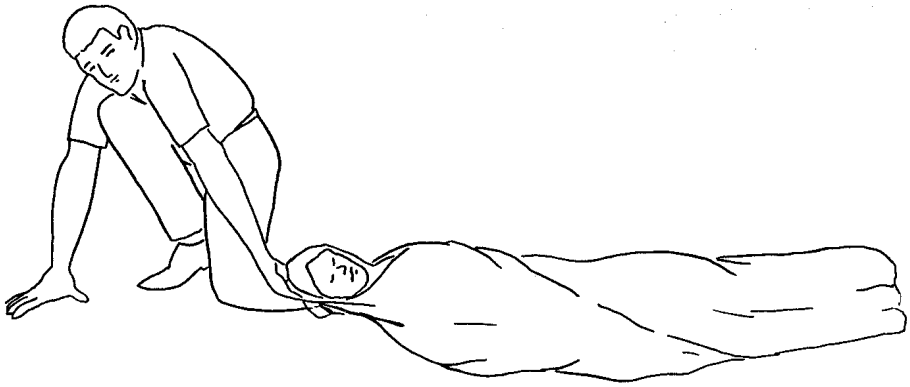

Blanket Drag

Blanket drag, showing the victim wrapped in a blanket with the rescuer squatting at the victim's head. The rescuer grasps the blanket behind the victim's head and drags him or her clear of the hazard.

CONDUCTING RESCUE OPERATIONS (CONTINUED)

EXERCISE: VICTIM CARRIES

Purpose: This exercise will provide you with an opportunity to practice different drags and carries to safely move victims.

Instructions:

1. Break into teams of seven.
2. Members of your team will volunteer to be "victims" that other team members will move using the drags and carries demonstrated in the class.
3. Use chairs and other items as needed to perform the drags and carries.
4. Be sure to trade off "victim" and "rescuer" roles so that everyone on your team has a chance to practice the drags and carries.
5. Remember to know your limits! Do not attempt any lift or carry that will not be safe for you and the victim.

EXERCISE: VICTIM EXTRICATION

Purpose: This exercise will provide you with an opportunity to practice the removal of entrapped victims from a damage site, using leveraging/cribbing and drags and carries.

Instructions:

1. Break into teams of seven.
2. Your team will be directed to a "damage site." Consider your plan of action.
3. Enter the "damage site" and conduct a room search. Locate victims and make a plan for extricating them from the debris.
4. Use leveraging and cribbing procedures as needed to free the victim.
5. Use appropriate lifts and drags to remove victims from the room (and, if possible, from the building).
6. If there is a second "damage site," conduct another rescue operation.

UNIT SUMMARY

The key points in this unit:

- The decision to attempt a rescue should be based on:
  - The risks involved
  - Achievement of the overall goal of doing the greatest good for the greatest number
- The objectives of interior and exterior search and rescue are to:
  - Maintain rescuer safety at all times
  - Rescue the greatest number of people in the shortest amount of time
  - Get the walking wounded and ambulatory victims out first
  - Rescue the lightly trapped victims next

Remember that CERTs are restricted to *light search and rescue*. Your mission when dealing with heavily damaged structures or situations that are clearly unsafe (e.g., rising or swiftly moving water) is to warn others.

- Search and rescue sizeup follows the same process as sizeup for other CERT operations. Sizeup continues throughout search and rescue efforts and provides information about how to proceed. Should sizeup indicate that evacuation of the team is necessary, the CERT mission is to ensure safety and organization during the evacuation.
- When the decision to begin search operations is made, CERT searchers must:
  - Employ appropriate search techniques
  - Locate any victims and check for the “three killers”
- Locating victims means completing a sizeup of the building interior to identify areas of entrapment, then conducting a search that:
  - Is systematic and thorough
  - Avoids unnecessary duplication of effort
  - Documents results

UNIT SUMMARY (CONTINUED)

- Rescue involves three main functions:
  - Moving objects and debris to create a safe rescue environment and to free victims
  - Triaging victims by checking for the "three killers" (airway obstruction, major bleeding, and shock)
  - Removing victims as safely and as quickly as possible

Remember that rescuer safety is always the top priority.

Rescue operations hinge on maintaining rescuer safety, which requires CERT members to recognize their own limitations. CERT members should *never* attempt anything that exceeds their limitations *at that point in time.*

Leveraging and cribbing may be used to lift heavy debris and give access to trapped victims.

Victims can be removed in a number of ways, depending on:

- Their condition
- The number of rescuers available
- The strength and ability of the rescuers
- The stability of the environment

If the building's condition allows, victims with suspected head or spinal injury should be stabilized on some type of backboard before being removed. When possible, these removals should be deferred to trained EMS personnel.

HOMEWORK ASSIGNMENT

Read and become familiar with the unit that will be covered in the next session.

[This page intentionally left blank]